Document generated on 10/12/2024 12:18 a.m.

Scientia Canadensis
Canadian Journal of the History of Science, Technology and Medicine
Revue canadienne d'histoire des sciences, des techniques et de la médecine

“Perfect Dry Plates for Canada”: Gelatine Dry-Plate Manufacturing in Canada in the Late Nineteenth Century

Shannon Perry

Volume 44, Number 1, 2022

Photography: Science, Technology and Practice

URI: https://id.erudit.org/iderudit/1098139ar
DOI: https://doi.org/10.7202/1098139ar

See table of contents

Publisher(s)

CSTHA/AHSTC

ISSN

1918-7750 (digital)

Explore this journal

Cite this article

Perry, S. (2022). “Perfect Dry Plates for Canada”: Gelatine Dry-Plate Manufacturing in Canada in the Late Nineteenth Century. *Scientia Canadensis*, *44*(1), 31–49. https://doi.org/10.7202/1098139ar

Article abstract

This article seeks to identify the commercial efforts of Canadian photographers to manufacture and distribute gelatin dry-plates in the 19th century. Using archival material and published advertisements, several companies including the Stanley Dry Plate Company of Montreal are identified and positioned within the photographic manufacturing landscape in Canada. In doing so, the commercial efforts of Canadian manufacturers are contrasted with the parallel developments in dry-plate manufacturing in the United States and England, further situating Canada’s photographic manufacturing history within a broader context.

All Rights Reserved © Shannon Perry, 2022

This document is protected by copyright law. Use of the services of Érudit (including reproduction) is subject to its terms and conditions, which can be viewed online.

https://apropos.erudit.org/en/users/policy-on-use/

érudit

This article is disseminated and preserved by Érudit.

Érudit is a non-profit inter-university consortium of the Université de Montréal, Université Laval, and the Université du Québec à Montréal. Its mission is to promote and disseminate research.

https://www.erudit.org/en/

"Perfect Dry Plates for Canada": Gelatine Dry-Plate Manufacturing in Canada in the Late Nineteenth Century

Shannon Perry

Abstract: *This article seeks to identify the commercial efforts of Canadian photographers to manufacture and distribute gelatin dry-plates in the 19th century. Using archival material and published advertisements, several companies including the Stanley Dry Plate Company of Montreal are identified and positioned within the photographic manufacturing landscape in Canada. In doing so, the commercial efforts of Canadian manufacturers are contrasted with the parallel developments in dry-plate manufacturing in the United States and England, further situating Canada's photographic manufacturing history within a broader context.*

Résumé : *Cet article cherche à définir les efforts commerciaux des photographes canadiens pour fabriquer et distribuer des plaques sèches à la gélatine au XIXe siècle. À l'aide de documents d'archives et de publicités imprimées, plusieurs entreprises, dont la Stanley Dry-Plate Company de Montréal, sont identifiées et positionnées dans le paysage canadien de la production de photos. Les efforts commerciaux des fabricants canadiens sont ainsi mis en contraste avec les développements qui ont eu lieu en parallèle dans la fabrication de plaques sèches aux États-Unis et en Angleterre, ce qui permet de situer l'histoire canadienne de la production photographique dans un contexte plus large.*

Keywords: Dry plates, Manufacturing, Patents, Photograph,; Stanley Dry Plate Co.

From the first announcements in 1839, photography has been understood, to varying degrees, as a complex blend of art and science: as a process, it has been subject to constant refinements and improvements, especially in the nineteenth century.[1] Advancements in chemistry and technology were welcomed, as photographers sought faster exposure times, clearer images, and ease-of-use that facilitated picture-making. Arguably the most significant development for photography was the introduction, in in the late 1870s, of the gelatine dry plate as the carrier for photographic emulsions in commercial applications, the focus of this article.

An 1898 advertisement for the Stanley Dry Plate Works of Montreal that appeared in *The Canadian Journal of Medicine and Surgery* (**Fig. 1**) proclaimed: "Physicians will find the Stanley Dry Plate to give the most satisfactory results. It can be secured of any sensitometer and will produce shadow and high light [sic] to perfection. To be procured from any photo stock house." Positioned between advertisements for "McLaughlin's Matzel Kefir," "The Canadian Cigar Co.", and "Abbot's Effervescent Saline Laxatives," it was one of six advertisements related to photographic materials that appeared i the journal, and the only one from a Canadian company specializing in photographic materials.[2] Why is this significant? In the decade preceding the Stanley advertisement, photographic technology had reached the point where the steps required to take a photograph had been reduced to a simple press of the button, and where photographic supplies could be accessed easily in most cities and towns across Canada. The ways in

© The Author, 2022. Published by Érudit on behalf of the Canadian Science & Technology Historical Association. All rights reserved. Shannon Perry, "'Perfect Dry Plates for Canada': Gelatine Dry-Plate Manufacturing in Canada in the Late Nineteenth Century," *Scientia Canadensis* 44, no. 1 (2022): 31-49.

which commercially produced dry plate negatives encouraged new or increased use of photography, including in science and medicine, are well documented in photographic history; however, there is little understanding of how and where the manufacturing of these materials occurred, in Canada or elsewhere.[3] There is a small, but focused body of scholarly work that considers the role and impact of chemistry and technology on the growth of the photographic industry in the nineteenth and early twentieth centuries, with Reese Jenkins' *Images and Enterprise: Technology and the American Photographic Industry 1839-1925*, published almost 50 years ago, still the most cited. Much research, however, remains to be done.[4] Canadian-made gelatine dry plates, including those advertised in Figure 1, present an opportunity to investigate an area with far-reaching implications for historians: the technology behind image making in Canada.

Photographic images are often presented in historical studies as supporting evidence for the corresponding text, with authors focusing on the image content. By turning our attention to the photograph as an object, we can break down the production of the image, and examine individual components, such as the science and technology of photographic negatives.[5] By focusing on the photographic negative — specifically the gelatine dry plate process that led to the Stanley Dry Plate (**Fig. 1**) — we see an object that was subject to repeated technological change to make it commercially available in the late nineteenth century.[6] In questioning how, when, where, and why the Stanley Dry Plate negatives were made available to Canadian consumers, we tease out new layers of information and meaning-making that help us understand how Canadian dry-plate manufacturing fits within the broader technological and consumer history of photography.

Drawing upon nineteenth-century periodicals and archival sources, positioned at the intersection of science (dry plates) and technology (photography), this article explains who the Montreal dry plate manufacturer was, and how it was positioned within photographic manufacturing in Canada. The original research conducted for part of this article clarifies that there were at least two distinct types of dry-plate makers in Canada at the end of the nineteenth century: small-scale makers with local distribution, who typically employed hand production; and large-scale factory-based makers, who were able to employ automated technology and/or other manufacturing techniques not available to the smaller manufacturers.

The Early Days of Manufacture and Distribution: 1840–1870

To understand how Canadian dry plate manufacturing fits within the broader technological and consumer history of photography, let us start at the beginning. The year 1839 is the largely accepted 'birthdate' of photography, with news regarding two different and competing photographic processes announced almost simultaneously by Louis Jacques Mandé Daguerre (1787-1851) in France and William Henry Fox Talbot (1800-1877) in England. Between 1840 and the late 1870s, a robust professional trade developed internationally, including in Canada, with photographic studios and itinerant photographers increasingly dotting the map. At the same time, dedicated amateur photographers grew in number, often within recognizable networks or communities, with photographic societies popping up in Paris, London, Manchester, and elsewhere.

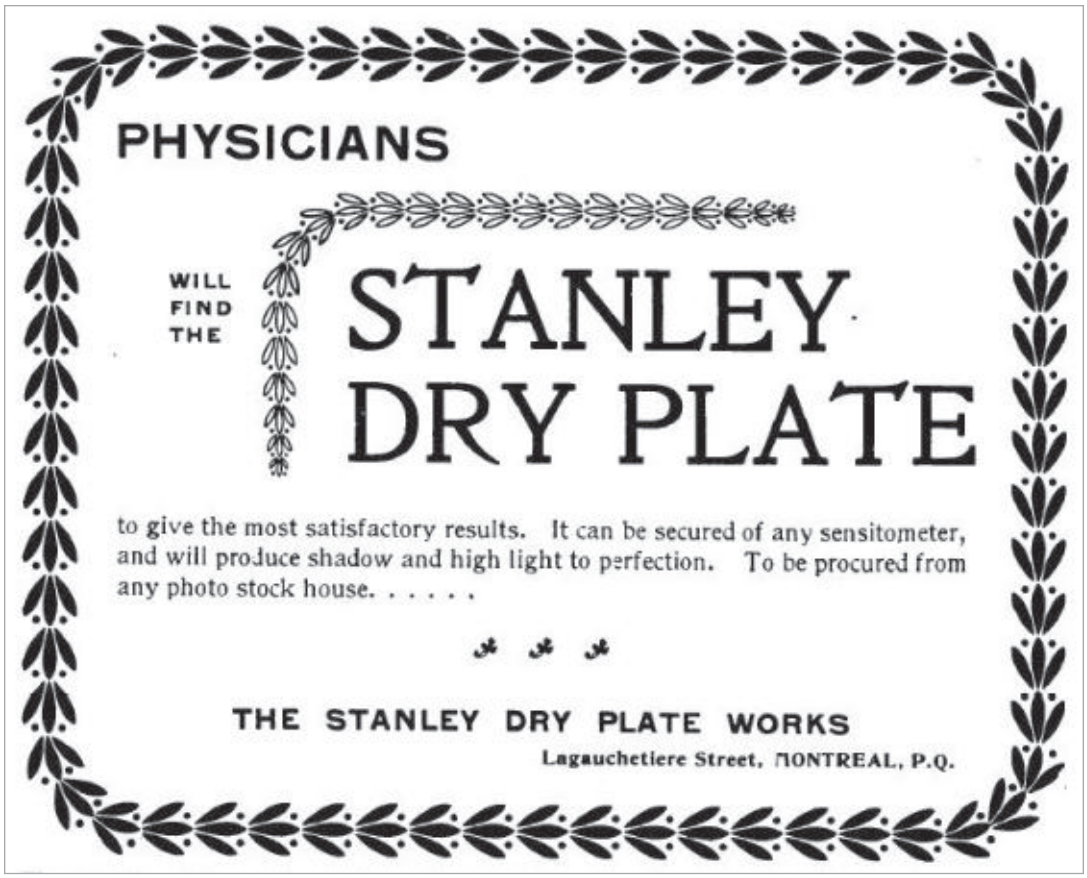

Figure 1. *Advertisement from* ***The Canadian Journal of Medicine and Surgery****, 4, No. 2 (August 1898), cvi.*

Later, in the 1880s, camera clubs began to form in increasing numbers in urban centres around the world.[7]

A working knowledge of chemistry was an essential requirement for these early photographers to create a photographic image: the photographer had to work with a variety of chemicals to create a sensitized surface immediately prior to exposure in the camera, and then develop and fix the image immediately afterwards to ensure permanence. As most photographers were not trained in chemistry or other scientific fields, published information about photographic chemistry (processes), optics (lenses), and technology (applications) was vitally important in the early days of photography. Photographically related information was regularly published across a range of sources, including scientific and professional trade journals such as *Scientific American* and *The Chemist* and new photography-focused periodicals such as the *British Journal of Photography* and the *Photographic News*, as well as general-interest publications and newspapers.[8]

In addition to information, individuals who practised photography also required reliable access to a long list of chemicals, chemistry-related supplies, and technical or precision instruments. At first, photographic materials circulated largely within existing manufacturing and distribution chains of related trades and materials. For example, optical instrument makers supplied lenses, and mail-order chemical supply

houses, local chemist shops, and pharmacies began to include photographers as regular clients, supplying the various scientific instruments and chemicals necessary for creating photographs.[9]

Listings in city directories and advertisements in newspapers and other published sources indicate that gradually, in the 1850s, a specialized photographic-supply industry began to emerge in major cities such as London, Paris, New York, and San Francisco.[10] These new 'photographic stock houses' supplied photographic equipment (cameras, lenses, plates, etc.) and photographically related chemistry (raw materials and pre-measured solutions or compounds) as well as information in the form of instruction booklets and other publications.

As photography continued to grow in popularity throughout the 1850s and 1860s, professional photographers themselves often participated in the sale of photographic materials. In Canada, professional photographers, such as Eli Palmer in Toronto, William Notman in Montreal, and J. E. Livernois in Quebec City, are known to have sold cameras and photographic supplies and offered photography lessons.[11]

For some 25 years before the arrival of commercially prepared gelatine dry plates in the late 1870s, the majority of camera work was carried out using wet collodion or 'wet plate' technology, first introduced in 1851, when Frederick Scott Archer (1813-1857) published the results of his photographic experiments in *The Chemist*.[12] His process offered the detail of the daguerreotype and the reproducibility of Talbot's negative-positive process. However, wet collodion photography was cumbersome and required immediate access to a darkroom. Collodion — nitrocellulose dissolved in alcohol and ether — containing some potassium iodide was poured onto a thoroughly clean glass plate, then sensitized in a silver nitrate solution. The sensitized plate was transferred to the camera, exposed using the photographer's experience to determine the length of exposure, and then developed in pyrogallol or ferrous sulfate while still damp. Finally, the plate was fixed with 'hypo' (sodium thiosulfate), washed, and dried. If the collodion dried before being developed and fixed, no image would form and the negative was rendered useless. It was messy, frustrating, labour intensive and time-consuming — and the sensitizing and developing process had to be carried out in relative darkness, away from all but limited red light. Published reports of accidental deaths and fires related to photographic chemical mishaps appeared regularly during this period. However, despite its difficulties and dangers, it proved to be a popular and widely adaptable process, gradually rendering older methods of photography — the daguerreotype and the calotype — more or less obsolete by the end of the 1850s.[13]

The Gelatine Dry Plate as Technological Change: 1870s

In the late 1860s, Dr. Richard Leach Maddox (1816-1902), an English physician and amateur photographer interested in photomicrography, was one of many seeking a replacement for the wet-collodion process. In 1871, he published an article entitled "An Experiment with Gelatino-Bromide" in the *British Journal of Photography*, in which he proposed a photographic emulsion that was a mixture of gelatine, nitric acid, hydrochloric acid, cadmium bromide, and silver nitrate.[14] As in the wet-plate process, the emulsion was coated on a glass plate. But what made Maddox's suggestions radically

different, was that the emulsion was allowed to dry; it nevertheless remained sensitive and could be subsequently exposed and developed. This meant that photographic emulsions could be prepared in advance. Maddox's dry plate was not immediately embraced as a clear improvement over wet plate because his initial efforts produced negatives that were less sensitive than existing wet-collodion technology and, therefore, required longer exposure times. From Daguerre and Talbot on, increasingly shortened exposure times were used as a measure for comparing photographic processes and the photographer's skill, and were regularly cited in studio or professional photographer advertisements.[15]

Maddox's experiments slowly gained interest from photographers, and over the next several years his discoveries were further explored and improved by countless photographers. Exposure times were gradually reduced, and details regarding improved emulsion formulas and techniques for coating, drying, and developing the non-collodion, or dry-plate negatives were regularly published in photographic and scientific journals.[16] Gelatine emulsion was notoriously difficult to produce, difficult to coat evenly on the glass plates, and costly to make because of the materials and labour required to produce plates of consistent quality. For these reasons, many photographers continued to use the older wet-plate process rather than switch to the 'new' process. Experimentation with the dry plate process was certainly challenging, and the published dialogue of ongoing experimentation that appeared in photographic and scientific periodicals reflects this.[17] Photographers greatly benefitted from the relatively free flow of published technical information, and by the late 1870s, a number of photographers practised dry-plate photography.

Large-scale commercial production of dry plates began in England (where the majority of dry-plate experimentation had occurred) in 1876, with the Liverpool Dry Plate and Photographic Printing Company. Within a decade, commercially prepared dry plates were being manufactured by dozens of companies and being sold internationally. Figure 2 is an 1883 advertisement for J. Desiré England's Dry Plates, which illustrated for readers of the *Photographic Journal* the advantages of purchasing and using commercially prepared dry plates. On the left, we see "Photography – Past," with the photographer setting out on a photographic excursion. He is bent with the burden of carrying heavy photographic equipment and requires several assistants to transport the myriad of necessary chemicals and instruments, including a chest clearly labeled 'tent.' He and his team appear rushed, eager to arrive early at their chosen location, with sufficient time to set up the portable darkroom tent and get the chemicals ready for plate coating. In contrast, on the right is "Photography – Present." The photographer is carrying only a small box of dry plates (labeled England's Dry Plates), while his assistant carries a small camera. They are unhurried, as their plates are ready to use and require no additional time for set-up and plate preparation. Between the two groups are allusions to the wide distribution the manufacturer enjoys, with boxes of dry plates ready for sale around the world.

Competition between manufacturers was growing, and not simply the result of an increasingly crowded market. Although published information about emulsion recipes and plate-coating techniques from the 1870s was essential in helping photographers establish the commercial dry-plate industry, freely shared details about emulsions and

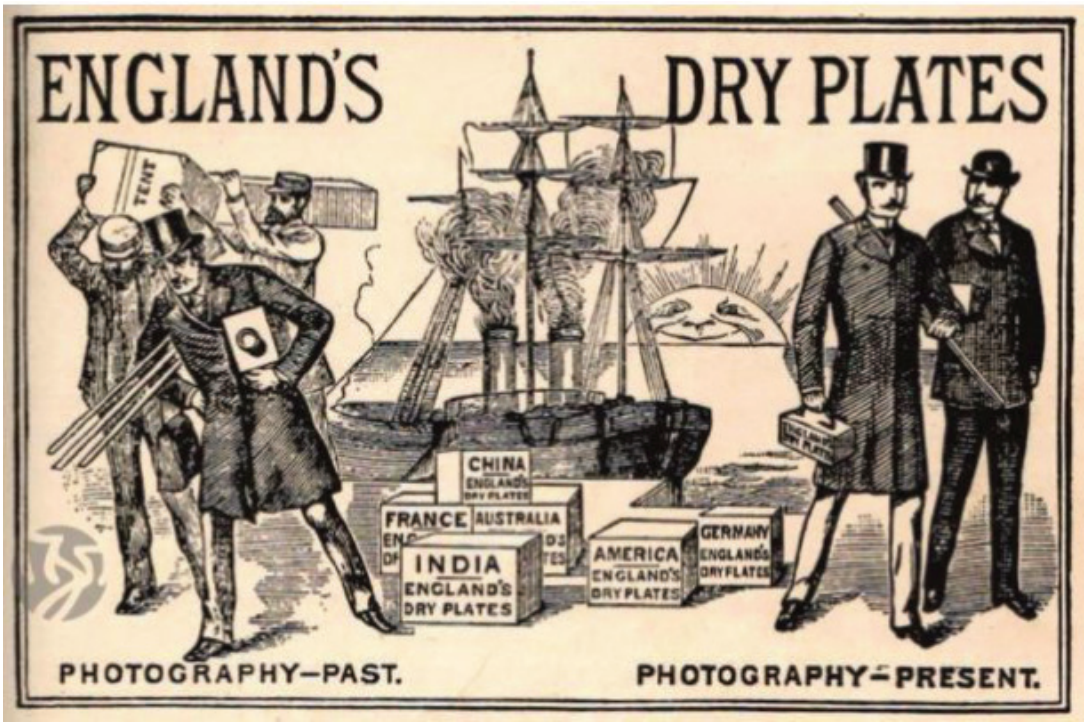

Figure 2. *Advertisement for J. Desiré England's Dry Plates in* ***The Photographic Journal****, 1883.*

coating techniques largely disappeared from published sources by the early 1880s, as emulsion recipes became carefully guarded trade secrets.[18] In his 1929 publication *Photographic Emulsions*, E.J. Wall, a prolific publisher of photographic information, noted:

> This trade or professional etiquette, which prevents the manufacturer from giving information as to his emulsions, is a serious stumbling block in the advance of our knowledge of the real whys and wherefores of emulsion making. In the early days, and it must not be overlooked that the gelatino-bromide emulsion was discovered by an amateur, the technical journals were filled with accounts of experiments in emulsion making; but since the commercial manufacture of plates an impenetrable wall of silence has shut down, that one might as well try to pierce as get through a modern safe with a knitting needle. This is, of course, explicable and understandable to some extent in view of commercial rivalry, but there can be no doubt that much valuable information might be given without violating professional secrecy.[19]

Dry-plate companies began to rely upon professional chemists and patent-protected emulsions, tools, and machinery to improve their plates by working to ensure consistency in emulsion quality and coating, with varying success. Tools and tests were devised to measure plate-sensitivity levels, ideal light conditions for exposure, and the reaction of the emulsion to seasonal changes in temperature and humidity, both to promote particular brands and to provide a degree of protection for the photographer purchasing plates.[20] A varieties of emulsions became available, each with their own characteristics, and a hierarchy of products and companies in the market began to emerge.[21]

From Hand to Machine Production: 1880s

As Wall suggested in his 1929 observations, the quality of the dry plate was not dictated by emulsion recipes alone. Technical steps in preparation, especially the even and consistent application of the emulsion, were key to commercial success. The process of pouring the gelatine emulsion onto the glass plate by hand was time consuming and difficult to control. Household objects were pressed into service, and new tools were invented to help, with varying levels of success. For example, teapots were frequently cited as the ideal tool for ensuring a controlled pour, and for enabling the photographer or manufacturer to capture and re-use the valuable emulsion

Machine technology for coating plates with emulsion was not practicable until the early 1880s, when twin brothers Freelan (1849-1940) and Francis (1849-1918) Stanley — founders of the Stanley Dry Plate Works — designed, patented, and utilized the first automated emulsion-coating machine for dry plates at their American factory, a step that revolutionized dry-plate manufacturing and brought automation to the Canadian photographic industry.[22]

Here, before discussing the Stanley automated emulsion-coating machine further, it is important to explain how dry-plate making in Canada was carried out more generally during this period. Several Canadian makers of dry plates between the 1880s and early 1900s have been identified through sources such as censuses, periodicals, advertising, and city directories, as well as anecdotal accounts, although the scale of production and length-of-time in business vary widely. It is not yet possible to attach firm numbers or identities to anything approaching a complete, or even a partial, list of participants. It is highly likely that most Canadian photographers who made and sold dry plates participated in "mixed trading," engaging in more than one trade.[23] These side businesses were often established out of necessity in markets with small populations that could not support specialized businesses.[24] Therefore, it is almost certain that some participants in Canada's nineteenth-century photographic marketplace do not appear in any census or other record.

In considering how to identify Canadian photographers engaged in commercial dry-plate making, we must also consider that they faced an increasingly crowded marketplace in the 1880s and 1890s. Stories of British and American photographers who were able to turn a dry-plate side-business into a profitable manufacturing company featured in photographic journals, and further encouraged photographers to consider making and selling dry plates. For example, in 1884, *Amateur Photographer* printed the travel diary of an English photographer visiting Canada. He observed:

> Mr. Norris thinks of going into plate-making commercially. My advice to him was "don't!" - to let well alone and stick to a certainty [studio portrait work or other commercial image making], notwithstanding the extraordinary reports that Cramer, of St. Louis [commercial production started 1880], had netted $650,000 last year at plate-making; on which, when I heard it, I remarked that we had "cram-mers" in England also."[25]

It is unclear if Norris, a professional photographer in Niagara, Ontario, decided to make dry plates commercially, or if he heeded the advice, but we do know that there were photographers who continued to make their own dry plates in Canada until the end of the 1890s, and did not rely completely on factory-based makers until the early

twentieth century. For example, a 1897 issue of *Canadian Photographic Journal* (published less than a year before the 1898 Stanley advertisement in **Fig. 1**) remarked that Charles MacLennan, a photographer from Truro, Nova Scotia, "besides being a first-class photographer, is a first-class chemist, making his own dry plates and demonstrating by chemical analysis many valuable points in photography, etc."[26]

There is also evidence of photographers producing dry plates in large quantities, primarily for use in their own studios. By his own account, such was the case with Montreal-based photographer William Notman, a savvy businessman who opened his first photographic studio in Montreal in 1856. By the 1880s Notman had established studios and partnerships in over 20 cities across Canada and the northeastern United States, employing one of the largest networks of photographers and photographically related labourers in North America at the time. It is understandable that when the dry-plate process became reliable enough for consistent use, he delegated specific employees at a single location to produce the plates for all his studios.[27]

But what of large-scale commercial manufacturers, who established factories and sought more ambitious scales of production? By combining details gleaned from census reports with information found in photographic periodicals, city directories, and local newspapers, at least three commercial manufacturers of dry plates, active between 1885 and 1900, have been identified: the Stanley Dry Plate Co. of Montreal (est. 1886); the Hamilton Dry Plate Co. of Hamilton (est. 1884); and Anderson, Robinson & Co. (est. 1892).

Notman provides insight into how photographers may have gradually shifted from coating their own plates to using factory-produced plates in the June 1888 issue of the *Photographic News*:

> For many years plates have been made by Canadian makers, some by photographers to supply their own requirements, others to supply the trade. Up to the end of 1884 we manufactured our own plates for use here in Montreal and at our branches. In the fall of 1884 the Stanley dry plates were taking a very prominent place in the market of the United States, and we had them tried very carefully at our US branches, and we found them so satisfactory that we resolved to give up making plates, and made arrangements with the SDPC to supply us. Those for our own use and sale in Canada we had to import, paying a duty of 30 per cent on the US prices. We found them so well received and appreciated throughout Canada that it naturally suggested itself to us that if we could induce the Stanley Company to start a factory in Montreal it would be much to our advantage and to photographers in general. The market and consumption throughout the Dominion was found to be very limited, and considered the biggest risk to starting the enterprise, and therefore an application was made to the Government to change the tariff from 30 per cent ad valorem to a specific duty of 15 cents per square foot.[28]

As a Montreal photographer (and Scottish immigrant), Notman was broadly aware of the happenings within photographic communities of England, and participated in discussions within internationally distributed photographic journals.[29] With franchise studios and a photographic distribution centre in the United States, he also had professional connections to the photographic industry in America.[30] His interests in photography were geographically, politically, and economically varied. As outlined in the *Photographic News* article cited above, when Notman decided to outsource the manufacturing of dry plates for his network of studios in 1884, he selected the Stanley Dry Plate Co. of Lewiston, Maine (established only a year earlier) to fill this important role.

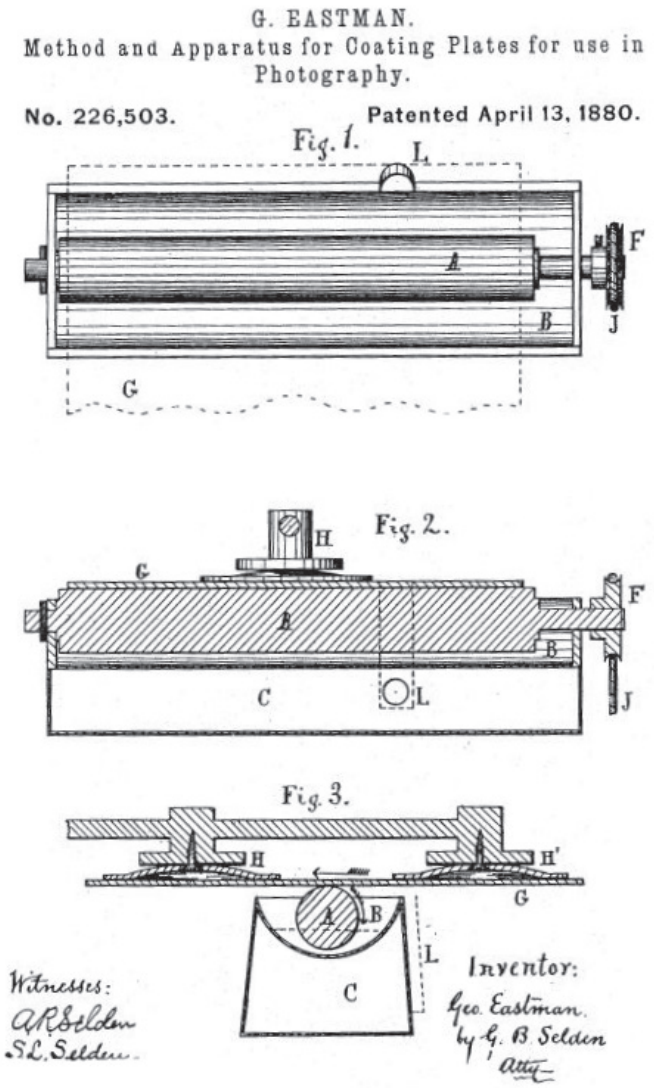

Figure 3. *Illustration from George Eastman's patent application for his 'Method and Apparatus for Coating Plates for use in Photography', patent US226503, patented 13 April, 1880.*

At the same time that the Stanleys were producing plates for Notman, they were also busy building their reputation in the US and working to improve and expand their production methods. Recognizing that coating the plates remained the largest hurdle, and noting similar methods to automate the process, they developed a mechanized coating machine. The first attempt at a coating machine was patented by George Eastman (**Fig. 3**) in 1880 and who quickly began selling the plans to manufacturers in the US and Europe. However, his machine did not work as well as advertised, with the emulsion often gumming up the machinery after one or two passes.[31]

In 1885, Toronto-based photographer Eli J. Palmer patented a design for a coating machine (patent US318761 /CA21546A), but to date there is no evidence that it was employed successfully.[32] According to his patent application, the machine consisted of

an emulsion vessel pivoted on an arm, to which a flexible tube was attached. A travelling belt moved the plates along, and when they passed under the emulsion vessel, emulsion was deposited from the tube. The tube was closed with pinchers when emulsion was not needed.

In 1885, after designing and perfecting the machine in their American factory for several months, the Stanleys filed a patent for their coating-machine with the United States Patent Office (**Fig. 4**).[33] Their use of innovative technology likely contributed to Notman's decision to select them to supply his studios, as Notman recognized the impact that automated production would have on the number of plates produced and made available for sale. The Stanley machine enabled plates to be coated at 60 times the rate of those previously coated by hand.[34]

The same year their patent was approved, the Stanley's established a small factory on the outskirts of Montreal, at 613-615 Lagauchetière St. The branch factory known as the Stanley Dry Plate Co. of Montreal entered the Canadian market as a domestic competitor with a strong connection to Notman, arguably the best-known Canadian photographer at the time. By locating the factory in Montreal, the Stanleys secured a well-situated manufacturing and distribution site close to rail and port transportation that facilitated wide distribution in Canada.[35]

In 1888, the same year Notman was explaining his relationship with the Stanley Dry Plate Co. in the *Photographic News*, the details of the coating machine were printed in the *Maine Farmer*:

> The plates are placed on an endless belt as the man would place the boards in a planer, and as they pass through the machine receive the coating, which is composed of bromide of silver, gelatine and water. At the other end stands a second man who takes these plates and places them in a rack to dry. These two men with this little machine do the work it formally required ten to do, and more than that, do it in better shape and secure more uniform results. Before, everything depended on the judgement of the workmen, now everything is done with the perfection and exactness of machinery.[36]

The machine worked by utilizing a coating head pivoted on a simple bearing, and the coating rod itself worked through capillary action; dripping liquid emulsion from a perforated tube onto a glass-coating rod that contacted each plate as it moved under it. Emulsion was fed from a hopper that kept continuous pressure. The plates then automatically moved to a second belt that passed through a tank of frigid water that began the chilling process, before they were racked for drying.[37] The factory was able to produce a larger number of plates with less labour and more consistent results and, within a few years, the Stanley dry plate became a favourite with many Canadian photographers.

In addition to the Stanley Dry Plate Co. in Montreal, dry-plate manufacturing facilities were established in Hamilton, Ontario, under the ownership of Thomas Gentle and James H. Farmer. The Hamilton Dry Plate Co. specialized in the "Lightning" plate and was mentioned regularly in the photographic journals in the annual convention reports of the Photographers Association of Canada (established 1884). In the Association's reports published between 1885 and 1887, the company garnered high praise for their efforts to produce a 'Canadian plate,' an important point for the Photographers

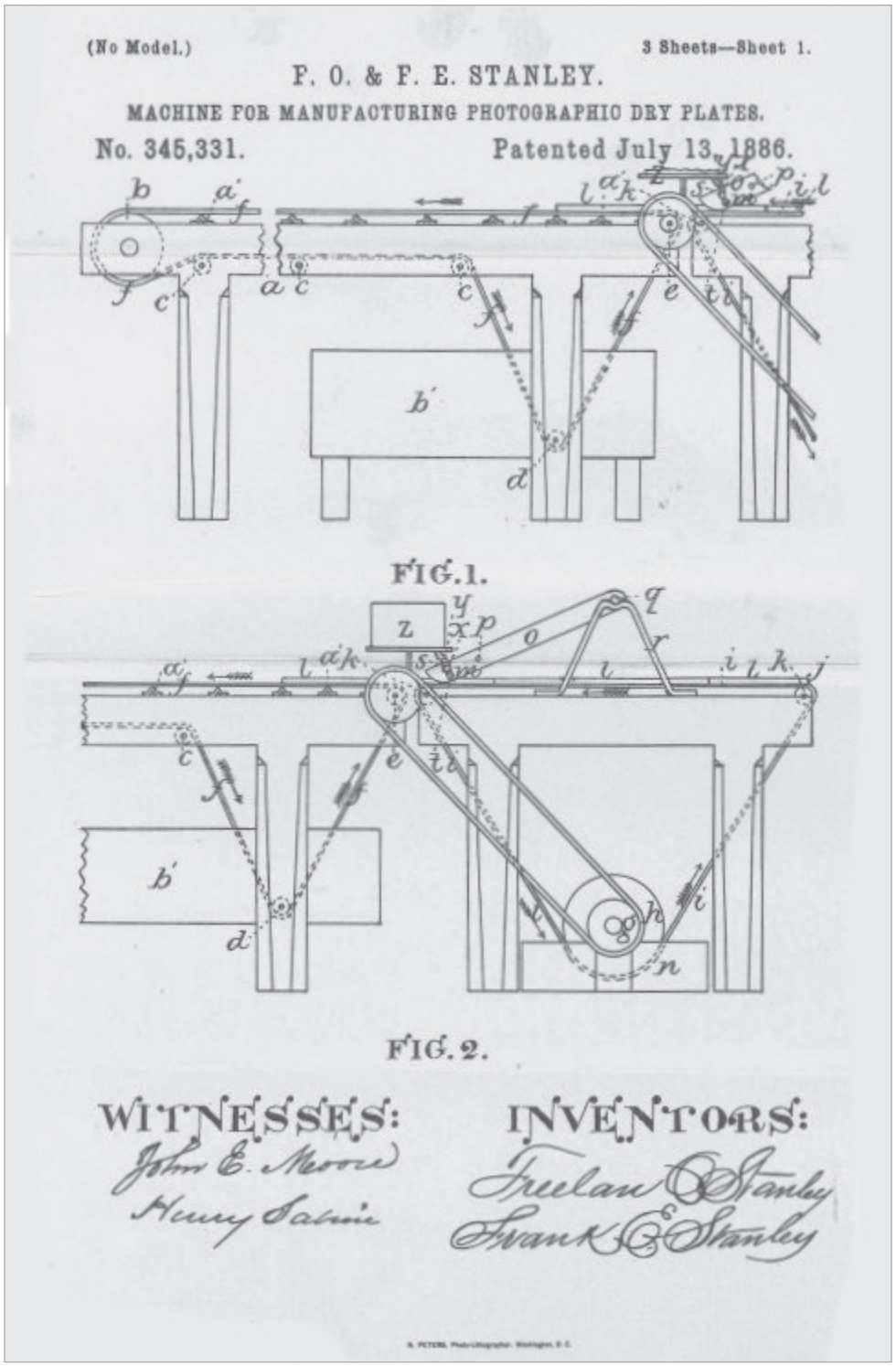

Figure 4. *Illustration from F.O. & F.E. Stanley's "Machine for Manufacturing Photographic Dry Plates," patent 345331. Granted 13 July 1886.*

Association of Canada, which explicitly sought to support Canadian photographers and Canadian manufacturers of photographic materials.

The Hamilton Dry Plate Co. published several advertisements in 1887 that reveal the progress of their manufacturing efforts, but also strongly hint at problems within the company. In a circular dated 7 June 1887, the company notified readers of the *St. Louis and Canadian Photographer* that Farmer had bought out his partner.[38] As the new sole proprietor, Farmer announced that he had made 'improvements' and was releasing the new 'J.H. Farmer Improved Plate' — "free from those annoyances which have often occurred under the late management." Here we see a clear acknowledgement that the company was still struggling to perfect its emulsion and coating techniques — essential components for dry-plate companies seeking to best their competition, domestic and foreign.

A few months later, another advertisement published in the same journal (**Fig. 5**) advised that the Hamilton Dry Plate Co. had purchased land on the Hamilton & Dundas Railroad and erected a "large brick factory, with sufficient capacity for supplying all demands of the trade in Canada."[39] The ad included another interesting reference to quality, with "all former difficulties overcome." The "difficulties" could have been the company's ability to supply plates in sufficient quantity or ongoing quality-control issues. It could have also referred to issues in management, which may explain the ownership split. The wording of the advertisement, which notes that the new factory is "without doubt one of the most complete factories on the Continent" is vague; a third advertisement, however, provides a clearer picture of what was happening. In December 1888, the *St. Louis and Canadian Photographer* published the following:

> THE J.H. FARMER DRY PLATE WORKS, Hamilton Ontario, having greatly improved and perfected their plates, have added to their out-put, the Nitrate of silver works of Ames & Baldwin and will continue the manufacture of the same high grade of silver turned out by these gentlemen and are prepared to supply both the wholesale and retail markets. Refining of waste will also be a large branch of their business. The Dominion of Canada has here, a branch of business growing up within its borders, second to none in the country, for supplying photographers with perfect goods.[40]

We can then read the reference to "one of the most complete factories" in the November 1887 issue as referring to a 'powered' facility that operated automated plate coating or other mechanized technologies; or, it could point to the company's planned expansion into chemical production and resource recycling, or some combination of the two.[41] By producing the very chemicals or materials needed to manufacture their photographic goods, the J. H. Farmer Dry Plate Co. (formerly the Hamilton Dry Plate Co.) reduced its reliance on foreign suppliers and decreased the cost of production. These two advertisements remind us of the importance of reliable infrastructure to nineteenth century-manufacturers. As with the Stanley Dry Plate Co. in Montreal, the J. H. Farmer Dry Plate Co.'s new factory provided access to railway transportation that allowed quick shipping of its photographic products across the country.

Notwithstanding the company's efforts to modernize and diversify their production, it was no longer in business by the end of 1891. Anderson, Robinson & Co. took over the factory, where it manufactured the "Star" dry plate.[42] A notice in the *Canadian*

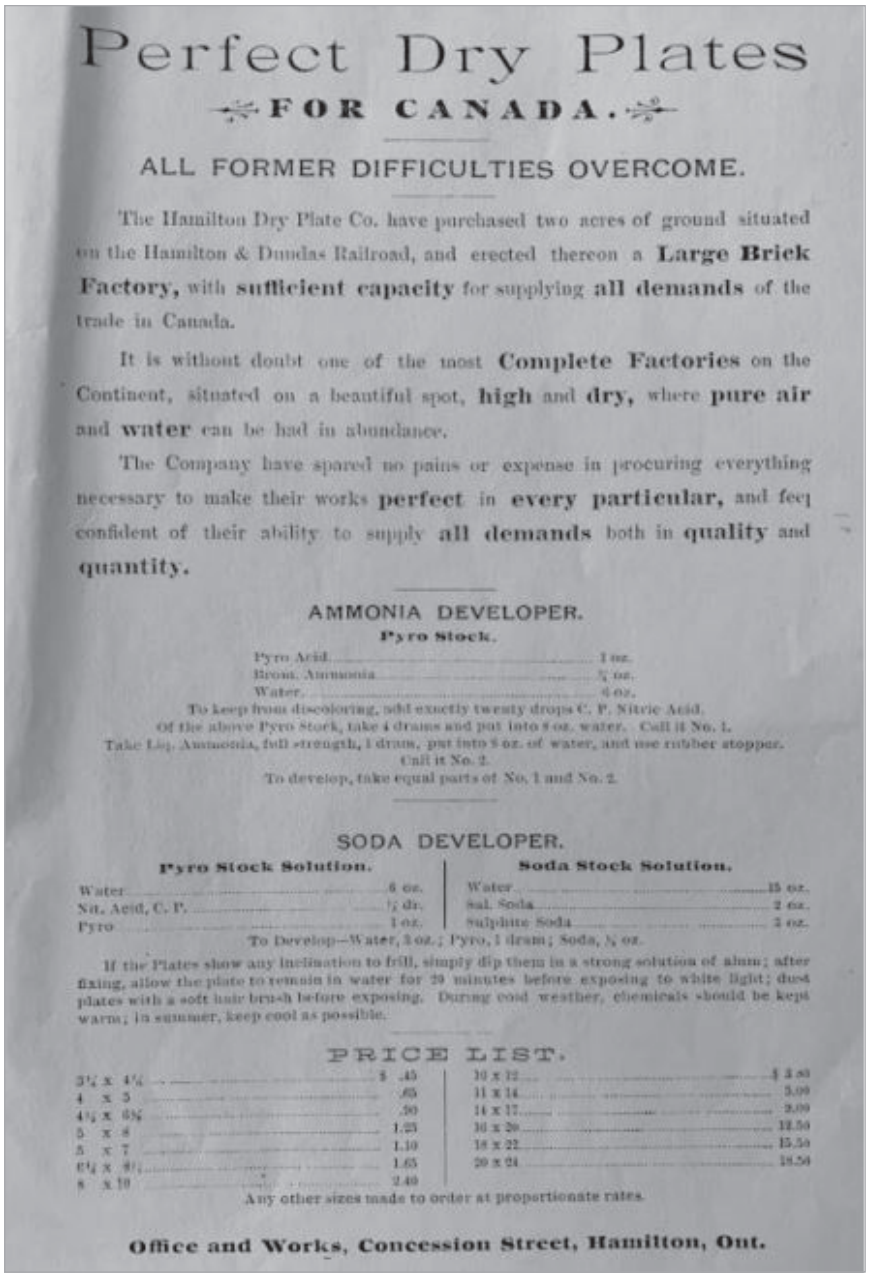

Perfect Dry Plates

FOR CANADA.

ALL FORMER DIFFICULTIES OVERCOME.

The Hamilton Dry Plate Co. have purchased two acres of ground situated on the Hamilton & Dundas Railroad, and erected thereon a **Large Brick Factory,** with **sufficient capacity** for supplying **all demands** of the trade in Canada.

It is without doubt one of the most **Complete Factories** on the Continent, situated on a beautiful spot, **high** and **dry,** where **pure air** and **water** can be had in abundance.

The Company have spared no pains or expense in procuring everything necessary to make their works **perfect** in **every particular,** and feel confident of their ability to supply **all demands** both in **quality** and **quantity.**

AMMONIA DEVELOPER.

Pyro Stock.

Pyro Acid	1 oz.
Brom. Ammonia	½ oz.
Water	4 oz.

To keep from discoloring, add exactly twenty drops C. P. Nitric Acid.

Of the above Pyro Stock, take 4 drams and put into 8 oz. water. Call it No. 1.

Take Liq. Ammonia, full strength, 1 dram, put into 8 oz. of water, and use rubber stopper. Call it No. 2.

To develop, take equal parts of No. 1 and No. 2.

SODA DEVELOPER.

Pyro Stock Solution.		Soda Stock Solution.	
Water	6 oz.	Water	15 oz.
Nit. Acid, C. P.	½ dr.	Sal. Soda	2 oz.
Pyro	1 oz.	Sulphite Soda	2 oz.

To Develop—Water, 3 oz.; Pyro, 1 dram; Soda, ¾ oz.

If the Plates show any inclination to frill, simply dip them in a strong solution of alum; after fixing, allow the plate to remain in water for 20 minutes before exposing to white light; dust plates with a soft hair brush before exposing. During cool weather, chemicals should be kept warm; in summer, keep cool as possible.

PRICE LIST.

3¼ x 4¼	$ .45	10 x 12	$ 3.00
4 x 5	.65	11 x 14	5.00
4½ x 6½	.90	14 x 17	9.00
5 x 8	1.25	16 x 20	12.50
5 x 7	1.10	18 x 22	15.50
6½ x 8½	1.65	20 x 24	18.50
8 x 10	2.40		

Any other sizes made to order at proportionate rates.

Office and Works, Concession Street, Hamilton, Ont.

Figure 5. *Advertisement for Hamilton Dry Plate Co. in* ***St. Louis and Canadian Photographer****, 5, No 11 (November 1887).*

Photographic Journal makes clear that the new tenants were eager to distance themselves from their predecessors:

> There is an impression in the minds of many, that the firm of Anderson, Robinson & Co, manufacturers of the "Eagle" and "Star" plate is a continuation of the old J. H. Farmer Dry Plate business. Such is not the case; and in order to remove any such impression these gentlemen wish it stated that further than the purchase of the plant, there is not, nor ever has been, any connection whatsoever.[43]

Despite Anderson, Robinson & Co.'s efforts to continue commercial plate-making in Hamilton, mention of their dry plates disappeared from the photographic press and local directories by the end of 1895.

In August 1896, the *Canadian Photographic Journal* declared that "The Stanley Plates have outlived all Canadian competition, and are now better and more popular than ever."[44] However, the dominance of the Montreal-based Stanley firm over the Canadian dry-plate manufacturing market would not last long. A year after the Stanley advertisement was published (**Fig. 1**), a very different advertisement was published in the *Canadian Photographic Standard* (**Fig. 6**). It stated that over the previous year sales of the Stanley dry plate had increased 30% and asked the reader "Doesn't this prove the popularity of the Stanley plate?" The answer, of course, is more complicated, for we know that the company's last remaining large-scale manufacturing facility had ceased to produce plates, though it had received congratulations from the Photographers Association of Canada for having "outlived all Canadian competition." The increase in Stanley's dry plate sales are reflective of increased sales for dry plates overall, domestically produced and imported. During the same period, the sale of imported dry plates was 29% higher, with the majority coming from the US.[45] It was partially for this reason that other American dry-plate manufacturers began to consider establishing factories in Canada, as the Stanley's had done over a decade earlier.

Kodak comes to Canada: 1900s

In 1898, George Eastman, of the Eastman Kodak Company in Rochester, NY, began to consider opening a Canadian factory. A year later, the Canadian Kodak Company was established in Toronto. Although dry plates were not then made there, the Toronto factory focused on assembling cameras and re-packing photographic film and sensitized paper made in the US.[46] In 1902, as part of a move to acquire the Stanley factory in the US, Eastman began negotiations to purchase the Stanley Dry Plate Co. in Montreal, the only remaining manufacturer of dry plates in Canada.[47] In correspondence with one of his London-based executives in 1904, Eastman outlined his reasons for shifting manufacturing to Toronto:

> Palmer [Kodak Toronto manager J. G. Palmer] is negotiating for the west 50ft next to our King St buildings and I would propose to erect a building there for the manufacture of dry plates and the coating of gelatine papers and film...We can ship the support for the film in free of duty and of course if we can make emulsion there suitable for glass plates we can also make it good enough for film.[48]

Shortly after Eastman's successful purchase of Stanley in early 1904, the Montreal factory was closed, and all machinery, materials of value, and key skilled employees were transferred to the Kodak factory in Toronto.[49]

The closure of the Stanley factory in Montreal and the intiation of dry-plate manufacture in Toronto would be the last large-scale change in dry-plate production in Canada. As suggested in Eastman's letter, dry-plate manufacturing, with certain changes, began at the Kodak factory in Toronto. The same emulsion for dry plates was now used to coat flexible film, a development in the photographic industry that would render dry plates obsolete within the next few decades. Dry-plate making in Canada, which had

Figure 6. *Advertisement for Stanley Dry Plate Co. from the* ***Canadian Photographic Standard****, 7, No 10 (October 1899): 772.*

led to automated manufacturing in the Canadian photographic industry, was soon replaced by a new process and increasingly automated and modern manufacturing techniques. This process of technological change in commercial manufacturing in the photographic industry eventually saw the Kodak factory in Toronto close in 2005, as film-based photography was largely replaced by digital imaging in the early years of the twentieth-first century.[50]

Conclusion

Examining the technology surrounding the gelatine dry-plate negative, and the ability of Canadian photographic manufacturers to produce, package, and sell shelf-stable light-sensitive products to consumers across Canada has far reaching implications. The developments discussed in this article enabled photographers — professional and amateur alike — to purchase ready-made plates and produce images with increasingly reliable results and minimal fuss. Photographic production during this period steadily increased, and continued to do so, into the twentieth century as technologies were further refined. Within Canadian museums and archives, and tucked into private collections, are remnants of the photographic images that were ultimately produced from the Canadian-manufactured dry plates discussed in this article. When viewing these images, we should consider how the plates that recorded the images were made, and the technologies that enabled their creation.

While this article begins by identifying Canadian gelatine dry-plate manufacturers, and how they fit within the broader technological and consumer history of photography, much work remains. Methods of national distribution and advertising, as well as how dry plates were positioned within photographic instruction and education in Canada, are two areas for further research that may reveal new insights about the photographic industry in Canada, and Canadian manufacturing, retailing, and professional education and training more broadly. This article offers a beginning into these lines of inquiry.

Shannon Perry teaches history of photography, and archival theory and practice at Carleton University. She has worked at Library and Archives Canada in Ottawa, Ontario, for over a decade as a private and government archivist, specializing in photography. Her research focuses on Kodak, and the photographic industry in Canada more broadly, in the 19th and early 20th centuries, and was the focus of her dissertation (PhD, Visual Cultural Studies, De Montfort University), and a forthcoming monograph, "When Kodak Came to Town" (U of T Press).

Endnotes

1 Broad histories of photography, such as Naomi Rosenblum's *A World History of Photography*, 4th ed (New York: Abbeville Press, 2007) and Michel Frizot's *A New History of Photography* (Köln: Könemann, 1998) generally include overviews of the major changes within photographic technology and chemistry.

2 This specific advertisement ran three times in this journal in 1898: July, August, and September. The other five photographic advertisements included: Sunart Camera, from the Sunart Photo Co. of Rochester NY; Gundlach Optical Co. of Rochester NY advertising photographic apparatus; X-ray plates from Cramer Dry Plate Co. of St. Louis; Folding Pocket Camera from Eastman Kodak Co. of Rochester; Premo Camera from the Rochester Optical Co.

3 The ties between photography and the medical profession are perhaps best summarized by a camera advertisement printed in the same journal: "Records of interesting cases may be kept by means of photographs, which are easily made with a Premo." The use of photography in medical practice goes back to the early days of photography. See Tanya Sheehan, *Doctored: The Medicine of Photography in Nineteenth-Century America* (University Park, PA: Penn State University Press, 2011); Josh Ellenbogen, *Reasoned and Unreasoned Images: The Photography of Bertillon, Galton, and Marey* (University Park, PA: Penn State University Press, 2012); Andrea Zittlau, "Pathologizing Bodies: Medical Portrait Photography in Nineteenth-Century America," *Amerikastudien / American Studies* 58, 4 (2013): 543-558; Beatriz Pichel, "Reading Photography in French Nineteenth-Century Journals," *Media History, Special Issue "Working with Nineteenth-Century Medical and Health Periodicals,"* 25, no. 1 (2019):51-69.

4 Reese Jenkins, *Images and Enterprise: Technology and the American Photographic Industry 1839-1925* (Baltimore: John Hopkins University Press, 1975). Rarely has discussion regarding photographic technology and manufacturing been extended to include Canada.

5 Reading photographs as objects has a wide research body from which to draw; however, I am most indebted to the work of Elizabeth Edwards and Joan Schwartz. See, for example: Elizabeth Edwards and Janice Hart, eds., *Photographs Objects Histories: On the Materiality of Images* (London: Routledge, 2004). The concept of a photograph as an object that can be 'black boxed' is expanded upon in my PhD dissertation, in which Actor Network Theory (as proposed by Bruno Latour) is included as part of my methodology. See Shannon Perry, "The Eastman Kodak Co. and the Canadian Kodak Co. Ltd: Re-structuring the Canadian Photographic Industry, c. 1885-1910," (PhD dissertation, De Montfort University, 2016). PDF available: https://dora.dmu.ac.uk/handle/2086/13060

6 See Risto Sarvas and David Frohlich, *From Snapshots to Social Media: The Changing Picture of Domestic Photography* (New York: Springer, 2011). They discuss and employ 'technological change' as the means and measure of retelling the history of photography.

7 The concept of communities in this paper draws upon Joseph Gusfield's definitions of 'community,' as well as Benedict Anderson's notion of 'imagined communities,' and views 'communities' as imagined through participation in camera clubs and specialized periodicals. Benedict Anderson, *Imagined Communities* (London: Verso, 2006) and Joseph Gusfield, *Community: A Critical Response* (New York: Harper Colophon, 1975). For information about the growth of photographic clubs in Canada, see Lilly Koltun, ed., *Private Realms of Light: Amateur Photography in Canada 1839-1940* (Toronto: Fitzhenry & Whiteside Ltd, 1984).

8 *Scientific American* was founded in 1845 and regularly featured articles related to photography. For example, see "On the Theory of Photographic Action," 19 December 1846. *The Chemist* (established 1840) regularly featured information about photography, including "On Photography," 1, no. 3 (1840): 120, republished from *Journal de Chimie Médicale* (February 1840). *The Photographic News* began publication in 1858.

9 For evidence of this circulation of materials through established chains, see Jenkins, as well as Michael Pritchard, "The development and growth of British photographic manufacturing and retailing 1839-1914." (PhD dissertation, De Monfort University, 2010).

10 See Jenkins, *Images and Enterprise* and Pritchard, "Development and growth."

11 See Alana West, "Eli John Palmer, Toronto Photographer," *Photographic Canadiana*, 36, no. 2 (July/August 2010): 7-25; Robert Landsale, "Eli John Palmer, Toronto Photographer 1849-1878,", *Photographic Canadiana*, 32, no. 4 (February 2011): 7-10; Stanley Triggs' work on Notman, for the McCord Museum http://collections.musee-mccord.qc.ca/notman_doc/pdf/EN/FINAL-NOTMAN-ENG.pdf.

12 Frederick Scott Archer, "On the Use of Collodion in Photography," *The Chemist* 12, no. 3 (1851): 257-258.

13 It is impossible to state definitively when a particular photographic process was no longer practised, and daguerreotypes produced after 1860 certainly exist, although they are rare. Also note, there are modern daguerreotypists practising today, for example, Mike Robinson, in Toronto.

14 Jenkins, *Images and Enterprise*, 66. Gelatine had been proposed as a carrier for silver salts before this time but nothing came of the idea. For example, W.H. Harrison published an article in 1868 on his partly successful experiments with gelatine silver bromide; see A *History of Photography Written as a Practical Guide and Introduction to its Latest Developments* (New York: Scovill Manufacturing Company, 1887), which includes "an appendix by Dr. Maddox on the discovery of the Gelatino-Bromide process." According to Tietz, "Maddox also experimented with different bases. For example, he combined silver bromide with 'vegetable gummy matters' like quince or linseed and 'starchy substances' like rice, tapioca and sago. Eventually, he tried out gelatine from a packet of Nelson's Gelatine Granules." Tabea Tietz, "How Richard Leach Maddox revolutionized Photography," (August 2017), 4. http://scihi.org/richard-leach-maddox-photography/

15 It was not uncommon to see photographers advertise the length of exposure or note that speedy exposures were a specialty, often by proclaiming to specialize in the photography of children.

16 Jenkins, *Images and Enterprise*, 68.

17 Examples are far too numerous to list here, but extracts and a historical reflection can be found in Harrison's *A History of Photography*.

18 Jenkins, *Images and Enterprise*, 178.

19 E. J. Wall, *Photographic Emulsions: Their Preparation and coating on glass, celluloid and paper, experimentally and on the large scale* (Boston: American Photographic Publications, 1929), 43-44. Wall also notes the lack of published monographs that detail emulsion making and its history, stating "If any excuse is needed for the publication of this work, it may possibly be found in the fact that since Abney's "Photography with Emulsions (1885)," Eder's "Photographie mit Bromsilber Gelatine und Chlorsilber-Gelatine (1903) ," and the writer's translation of an earlier edition of this latter work, which appeared serially in a photographic journal in 1892, there has been no work available on the subject." iv.

20 See Jenkins, as well as the work of Nicolas Le Guern, "Contribution of the European Kodak Research Laboratories to Innovation Strategy at Eastman Kodak," (PhD dissertation, Photographic History Research Centre, De Montfort University, 2017).

21 Dry-plate manufacturers began to produce different types of emulsions for a variety of uses and conditions, such as orthochromatic and anti-halation as experimentation continued during this period. Gelatine eventually proved to be an ideal base for photographic emulsions as it greatly increased the sensitivity of the emulsion. However, it would be decades after its first uses as an emulsion base before scientists discovered why. Primarily, it acts as a protective colloid — the gelatine keeps the silver grains suspended and helps them grow to controlled sizes. Denis Ross, "Dry Plate Photography," in *The Light Farm*, http://www.thelightfarm.com/Map/Books/cim/MapTopic.htm

22 The Stanley brothers are best known for their role in the early automobile industry and the company they formed, The Stanley Motor Carriage Company. They filed 29 separate patents related to automobiles and steam carriages 1900-1920. See: http://www.stanleymotorcarriage.com/patents/FE%20&%20FO%20Stanley%20Patents.htm

23 Steve Edwards, *Making of English Photography: Allegories* (University Park: Penn State University Press, 2006).

24 The practice of "mixed trading" is well documented for Canadian photographers, who simultaneously pursued a variety of other occupations such as barber, fancy-goods dealer, stationer, book dealer, watch-maker, jeweller, grocer, boot and shoe dealer, tailor, undertaker, druggist, dentist, and even washing machine manufacturer. However, information regarding the type and variety of professional services or products offered, years of practice as a photographer, or even an accurate number for these "mixed traders" is difficult to obtain, as a secondary (or tertiary) trade was not recorded in the census, lest it create the appearance of two separate positions where only one existed. Glen C. Phillips, *The Ontario Photographers List: 1851-1900*, (Sarnia: Iron Gate Publishing, 1990); *Manual Containing the "Census Act" and the Instructions to Officers Employed in the Taking of the Second Census in Canada, 1881*, (Ottawa: Department of Agriculture, Census Branch, 1911).

25 *Amateur Photographer*, 3 October 1884: 631.

26 "Notes from a Traveler," *Canadian Photographic Journal* 6, no. 1 (January 1897): 22.

27 Currently, research has not yielded the location or employees who are responsible; however, further research may reveal further details.

28 "Photographers Grievances in Canada," *Photographic News*, 32 (June 1888): 1553. The full reasons for Notman's relationship with the Stanley Dry Plate Co. are complex, and exceed the context of this article, which is focused on the technological aspects of dry plate manufacturing. Tariffs on imported photographic goods – specifically dry plates – played an important role, and explanation is provided in my PhD dissertation.

29 R.T. Naylor, *The History of Canadian Business: 1867-1914*, (Montreal and Kingston: McGill-Queens University Press, 2006), 121-129. For further information of Notman's ties to the British and Scottish photographic community, see Loren Lerner, "William Notman's 'Photographic Selections' (1863)," *Journal of Canadian Art History / Annales d'histoire de l'art Canadien* 33, no. 1 (2012): 16–45. http://www.jstor.org/stable/42616579.

30 Stanley Triggs, *The World of William Notman*, (Boston: Godine, 1993) 23-35. Beginning in the late 1870s, Notman operated a photographic goods and equipment stock house from his primary American location in Albany, New York. He also established nineteen permanent and seasonal studios in New England, with Boston being the longest-running of all. Stanley Triggs, "The Man and his Studio," (Montreal: McCord, 2005) http://collections.musee-mccord.qc.ca/notman_doc/pdf/EN/FINAL-NOTMAN-ENG.pdf

31 Elizabeth Brayer, *George Eastman: A Biography* (Baltimore: John Hopkins University, 1996): 34.

32 See West, "Eli John Palmer," 2.

33 Their patented machine was much sought after by their competitors, with Cramer of St. Louis offering $2,500 to install the machines in his factories. However, the brothers turned down the offer to install them in factories other than their own, much to their later regret: "We thought we had a monopoly on the coating of photographic dry plates, and we would have had, not only of plates, but films, for seventeen years, if the claims in our patent had been broad enough to cover all possible cases. But they were not and in less than three months Cramer, Seed, and Eastman were all coating their plates on machines that did not infringe on our patent. Had our patent been taken out by... any competent patent attorney it would have been worth at least a million dollars." Chris Holmquist, "The Stanley Brothers' 'Lost' Invention" (unpublished paper 2018) quoted in Jim Merrick, "Editors Report," *Stanley Museum Journal* 5, no. 1 (2020): 7.

34 Merrick, "Editors Report," 6.

35 The Stanleys' decision to establish a Canadian branch plant are complex and outside the scope of this article, but were rooted in a desire to avoid tariffs on imported dry plates. See Perry, "The Eastman Kodak Co. and the Canadian Kodak Co. Ltd."

36 "The Value of Machinery – The Stanley Dry Plate Co., Lewiston, ME," *Maine Farmer*, 5 April 1888: 1.

37 Merrick, "Editors Report," 7. The Stanley brothers invented two other machines central to their successful business, a plate-washing machine and a mat-cutting machine for packing plates. Neither one seems to have been patented and no evidence of their construction or design remains.

38 *St. Louis and Canadian Photographer* 5, 6 (1887): 187.

39 *St. Louis and Canadian Photographer* 5, 11 (1887): 264.

40 *St. Louis and Canadian Photographer* 6, 12 (1888): 310.

41 Identifying the 'power' source has not been resolved for either the Hamilton or Montreal factories, and is a subject for further research.

42 Anderson, Robinson & Co. had been manufacturing dry plates since at least 1890, as noted in several city and provincial directories. The last mention of the company is in Vernon's *4th Annual Hamilton Classified Business and Suburban Directory for 1894 to May 1895* (Hamilton: Griffin & Kinder, 1894). It is highly likely that they took over the space of the Hamilton /J.H. Farmer Dry Plate Co. as a result of a connection with Thomas Gentle (working as an upholsterer), who was their neighbour in the same industrial building on Aberdeen Ave.

43 *Canadian Photographic Journal* 1, no. 1 (1892): 23.

44 "Notice Board," *Canadian Photographic Journal* 5, no. 8 (1896): 226.

45 Perry, "The Eastman Kodak Co. and the Canadian Kodak Co. Ltd.," 139. Based upon information regarding import taxes and duties from annual Sessional Reports, in 1897 the total value of dry plates imported into Canada from was $16,579; in 1898 it was $25,502; and $32,963 in 1899, clearly showing the increased consumer interest for commercially produced dry plates.

46 Perry, "The Eastman Kodak Co. and the Canadian Kodak Co. Ltd.," 337-9. Carl Ackerman, *George Eastman* (Boston: Houghton Mifflin Co., 1930), 109; and Brayer, *George Eastman*, 386. Between 1895 and 1915 the corporation established 30-plus Kodak branches or distribution points internationally. At the same time, the corporation purchased over 35 previously independent manufacturers and distributors.

47 Perry, "The Eastman Kodak Co. and the Canadian Kodak Co. Ltd.," 234-238.

48 Eastman to Charles Abbott [London], 3 January, 1904, "General Business Correspondences – 1904", George Eastman Legacy collection, George Eastman Museum, Rochester, NY.

49 Perry, "The Eastman Kodak Co. and the Canadian Kodak Co. Ltd.,"241-242.

50 Kodak Canada announced the closure of Kodak Heights, its Toronto factory on December 9, 2004 and the final day of operations was June 30, 2005. Destruction of the majority of the manufacturing buildings began shortly thereafter, and was documented in Bob Burley's photo-documentation project, part of which is included in his *The Disappearance of Darkness: Photography at the End of the Analog Era*, (Princeton Architectural Press, 2012). See Ryerson Archives and Special Collections blog "Kodak in Toronto, 1899-2005", for further information: https://library.ryerson.ca/asc/2015/01/kodak-in-toronto-1899-2005-a-century-of-traces/